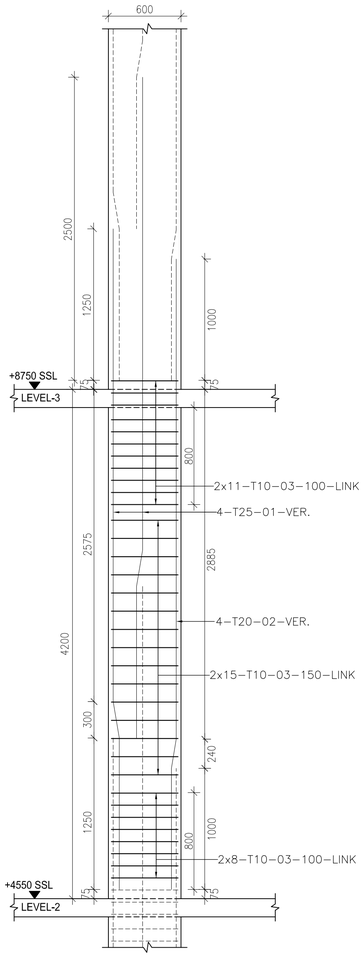

SECTIONAL ELEVATION FOR - C1,C2,C25

SCALE :- 1:25

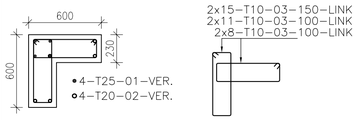

COLUMN-C1,C2,C25 **LINKS ARRANGEMENTS**

SCALE :- 1:25

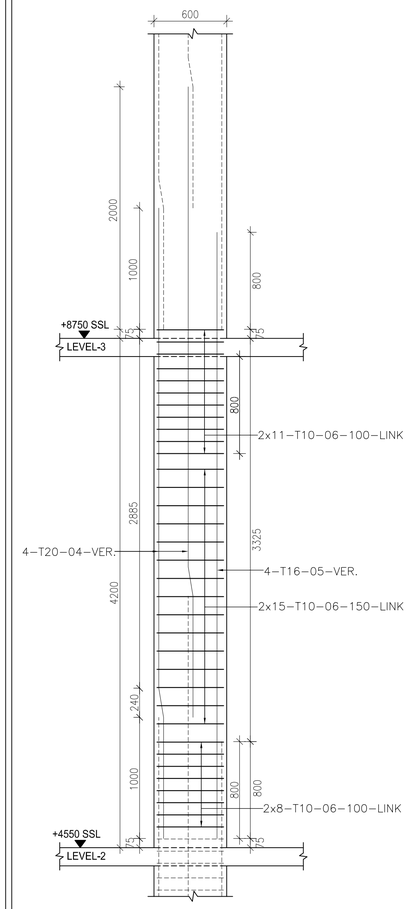

SECTIONAL ELEVATION FOR - C6,C26,C20

SCALE :- 1:25

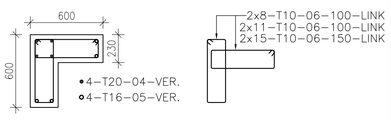

COLUMN-C6,C26,C20 **LINKS ARRANGEMENTS**

SCALE :- 1:25

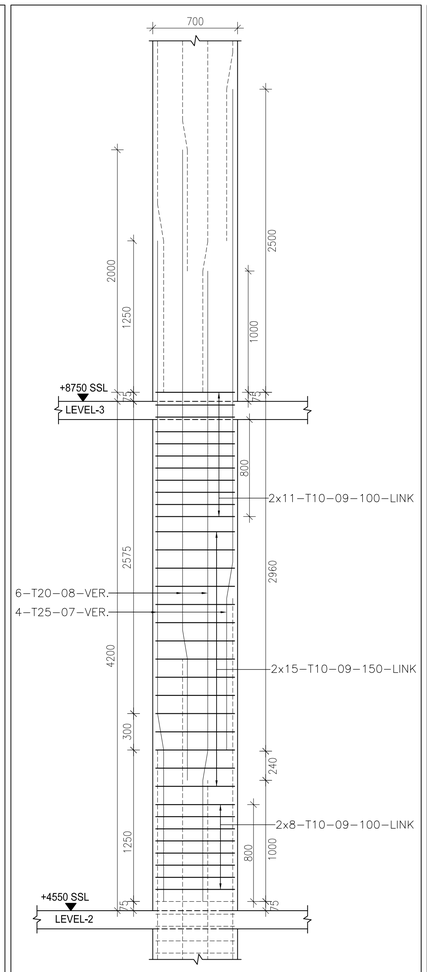

SECTIONAL ELEVATION FOR - C3,C4

SCALE :- 1:25

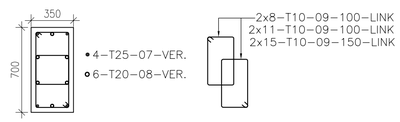

COLUMN-C3,C4 **LINKS ARRANGEMENTS**

SCALE :- 1:25

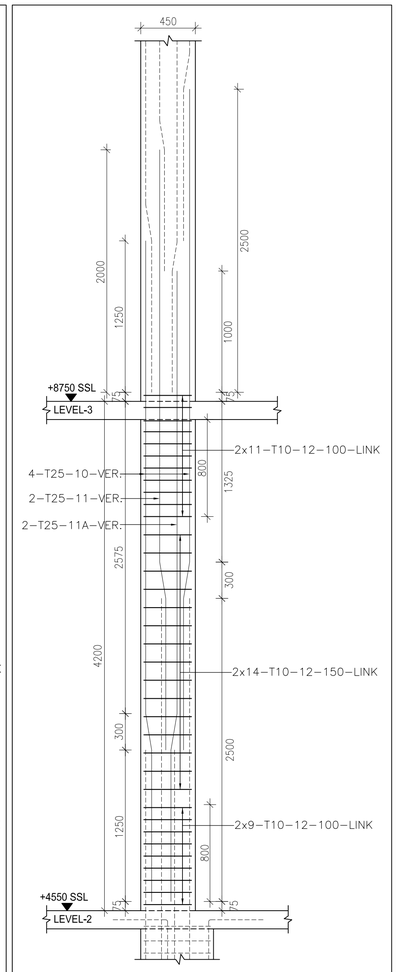

SECTIONAL ELEVATION FOR - C7,C19

SCALE :- 1:25

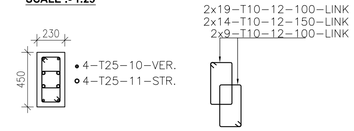

COLUMN-C7,C19 **LINKS ARRANGEMENTS**

SCALE :- 1:25

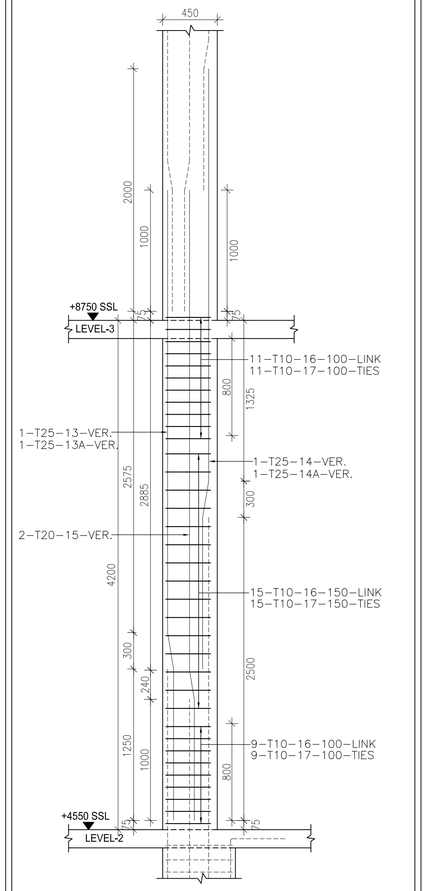

SECTIONAL ELEVATION FOR - C14,C8,C24

SCALE :- 1:25

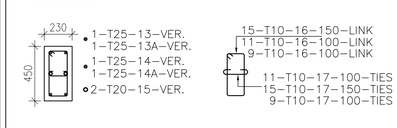

COLUMN-C14,C8,C24 **LINKS ARRANGEMENTS**

SCALE :- 1:25

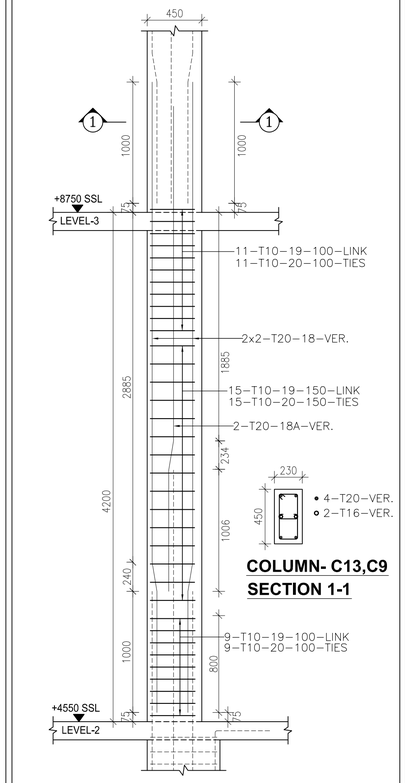

COLUMN- C13,C9
SECTION 1-1

SECTIONAL ELEVATION FOR - C13,C9

SCALE :- 1:25

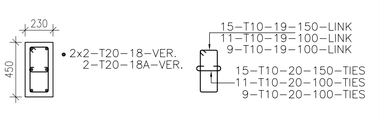

COLUMN- C13,C9 **LINKS ARRANGEMENTS**

SCALE :- 1:25

COLUMN VERTICAL REINFROCEMENT DETAIL (LEVEL-2 TO LEVEL-3)

SCALE:-1:25

NOTES

1.

NO	REVISIONS	DATE
R0	FOR APPROVAL	13/03/09

NO	DRAWING REFERENCES	DATE

CLIENT:
RESIDENTIAL DEVELOPMENT QUEENS DR. IKOYI
OLD IKOYI, LAGOS

PROJECT:
NI-APARTMENTS.
-
-

ENGINEERS:
EMMS CONSULTING ENGINEERS LIMITED.
(Consulting Civil/Structural Engineers)
I6, AJASA STREET,ONIKAN, LAGOS.
P.O.BOX 1624 IKEJA,LAGOS.NIGERIA.
TEL: +234-1-2702366,2702367,4610399,0802 776 7264
E-mail: emmsconsultants@emmsconsultants.com

BUILDING TYPE: NI-APARTMENTS

SHEET TITLE: LEVEL-2 TO LEVEL-3 COLUMN REINF. DETAIL SHEET-3 OF 4

DRAWING NO.: S100

SHEET NO.:

DATE: 18/03/09

SCALE: NTS.

JOB NO.: 8114

STATUS	CHECKED	DATE	REV.
PRELIMINARY	CH_1	DAT_1	A_1
APPROVAL	CH_2	DAT_2	A_2
CONSTRUCTION	CH_3	DAT_3	A_3